LI39-64120

Mini-ITX Motherboard with Intel® Celeron® Processor J6412

Mini-ITX

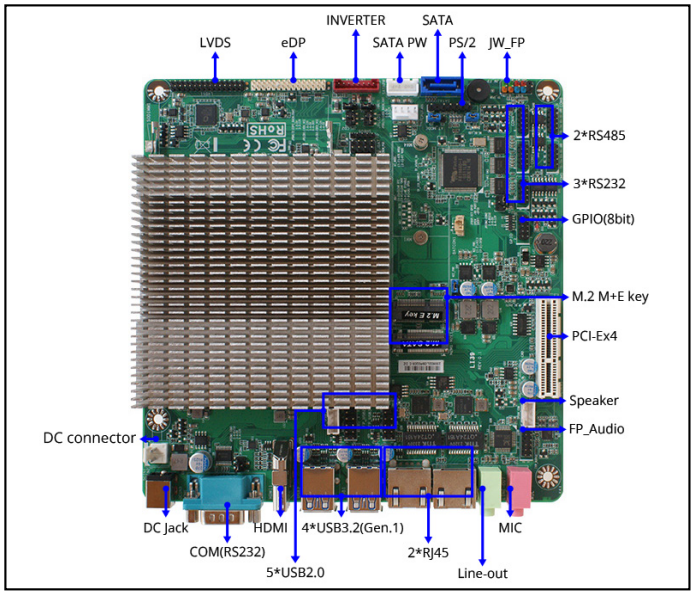

Features

- **Powered by Intel® Celeron® Processor J6412 (Elkhart Lake, TDP 10W)**
- **Supports multiple display options, including 1 x HDMI 2.0b, 1 x LVDS, and 1 x eDP**
- **Dual 2.5GbE ports deliver high-speed and reliable networking**
- **Integrated Realtek Audio with 3W amplifier, 1 x Line-out, 1 x MIC, and 1 x Speaker connector**
- **Comprehensive I/O includes 4 x USB 3.2 Gen1, 5 x USB 2.0, 2 x RS485, and 4 x RS232**
- **Storage and expansion: 1 x SATA III, 1 x M.2 M-key, 1 x M.2 E-key, and 1 x PCIe Gen 3x4**
- **Enhanced security with optional onboard TPM 2.0 support**

Packing List

PART NUMBER	DESCRIPTION	QTY
LI39 Series	LI39 MB	1
G01-COM-H2M22-1F	COM Cable	1
G01-SATAL-RD30-F	SATA Cable, 30cm	1
F04-MB-075-1F	I/O Shield	1

Specifications

SYSTEM	
MB FORM FACTOR	Thin Mini-ITX
CPU	Onboard Intel® Celeron® Processor J6412 (Formerly Elkhart Lake, TDP 10W)
CHIPSET	Intel® SoC
MEMORY	1 x DDR4 3200MHz, Single Channel SO-DIMM, up to 32GB
BIOS	UEFI
WAKE ON LAN	Yes
WATCHDOG TIMER	255 Levels
SECURITY	TPM2.0
RTC BATTERY	Lithium Battery
DIMENSION (W X D)	170.0 (W) x 170.0 (D) mm (6.7" x 6.7")
OS SUPPORT	Windows® 11 (64bit) Windows® 10 (64bit) Linux
POWER	
POWER REQUIREMENT	DC-in 12V
POWER ON MODE	AT / ATX
CONNECTOR	DC Jack 2-pin Power Con
DISPLAY	
GPU	Intel® UHD Graphics
LVDS	1 x 24-bit Dual Channel LVDS (Max. Resolution: 1920 x 1080 @60Hz)
eDP	1 x eDP (Max Resolution: 2560 x 1600@60Hz)
HDMI	1 x HDMI 2.0b (Max Resolution: 4096 x 2160@60Hz)
MULTIPLE DISPLAY	Support 3 Displays
AUDIO	
CODEC	Realtek Audio Codec
Line-out	1 x Audio Jack for Line-Out
MIC-in	1 x Audio Jack for MIC-In
AMPLIFIER	3W
LAN	
ETHERNET	2 x RJ45 for Intel® I226-V 2.5GbE
USB PORT	
USB	4 x USB 3.2 Gen 1x1 (5Gbps, Formerly USB 3.1 Gen 1) Internal Header for 5 x USB 2.0
SERIAL PORT	
COM	1 x DB-9 for RS-232 Internal Header for 3 x RS-232 Internal Header for 2 x RS-485
INTERNAL I/O	
GPIO	8-Bit
SMBUS	Yes
FAN	1 x 4-pin Connector for CPU Fan (PWM Mode)
FRONT PANEL	HDD Active LED Power LED Power On/Off Reset
ADDITIONAL	1 x PS/2 1 x Audio Header 1 x eDP 1 x LVDS
STORAGE	
SATA	1 x SATA III 1 x SATA Power Connector
EXPANSION	
M.2	1 x M-Key 2242/2280 (SATA) 1 x E-Key 2230 (USB 2.0/PCIe 3.0 x1)
PCIe	1 x PCIe 3.0 x4
ENVIRONMENT & CERTIFICATION	
SHOCK	15G, 11ms duration
VIBRATION	1 Grms/ 5~ 500Hz/ Operation
OPERATING TEMPERATURE	0°C ~ 60°C (32°F ~ 140°F)
STORAGE TEMPERATURE	-20°C ~ 70°C (-4°F ~ 158°F)
OPERATING HUMIDITY	10 ~ 90% relative humidity, non-condensing
CERTIFICATION	CE/FCC Class A

www.jetwayipc.com

CONTACT US 2026/11/20

Headquarter
support_team@jetway.com.tw
+886-2-89132711

USA
sales@jetwaycomputer.com
+1-510-857-0130

China
support_team@jetway.com.tw
+86-769-2101-8010

Note: All specifications are subject to change without notice.

Block Diagram

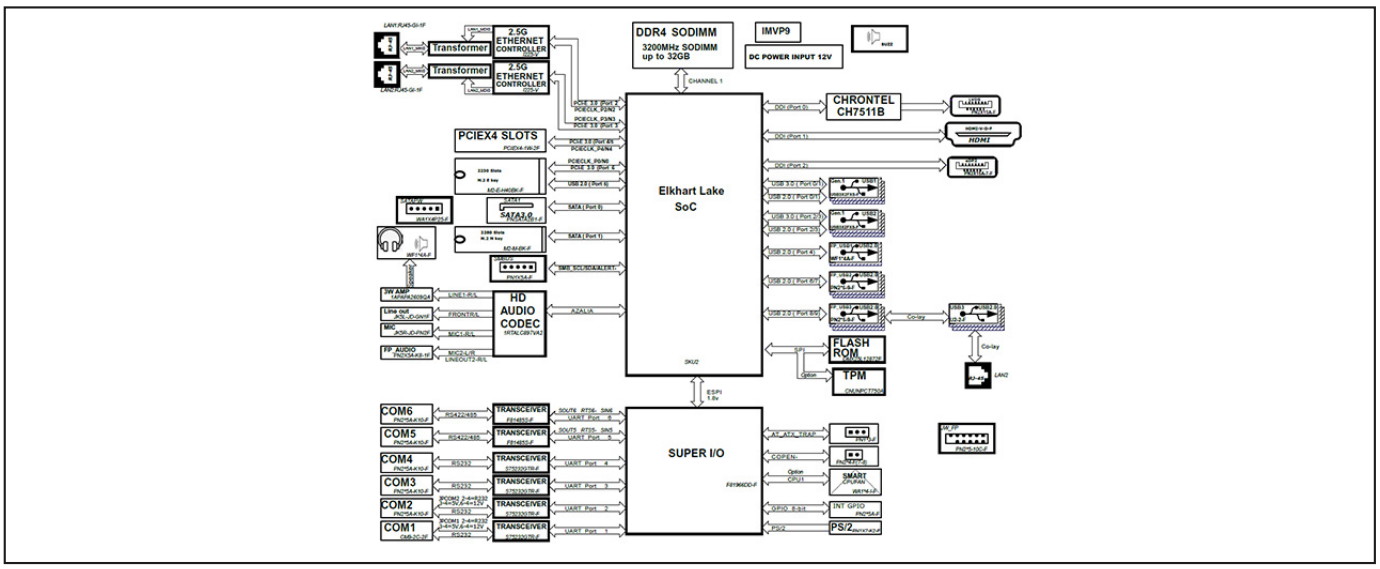

Dimension Unit: mm

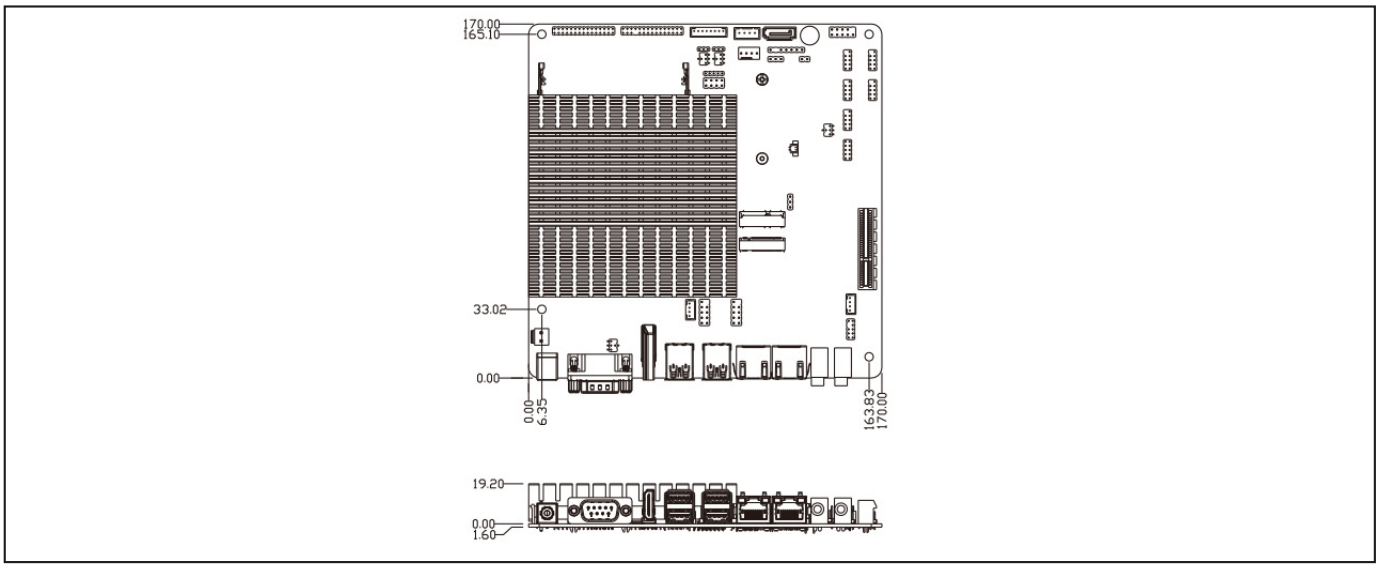

Headquarter
support_team@jetway.com.tw
+886-2-89132711
USA
sales@jetwaycomputer.com
+1-510-857-0130
China
support_team@jetway.com.tw
+86-769-2101-8010
Note: All specifications are subject to change without notice.